domix M9

PINOUT

Domotic Module for smart home & co

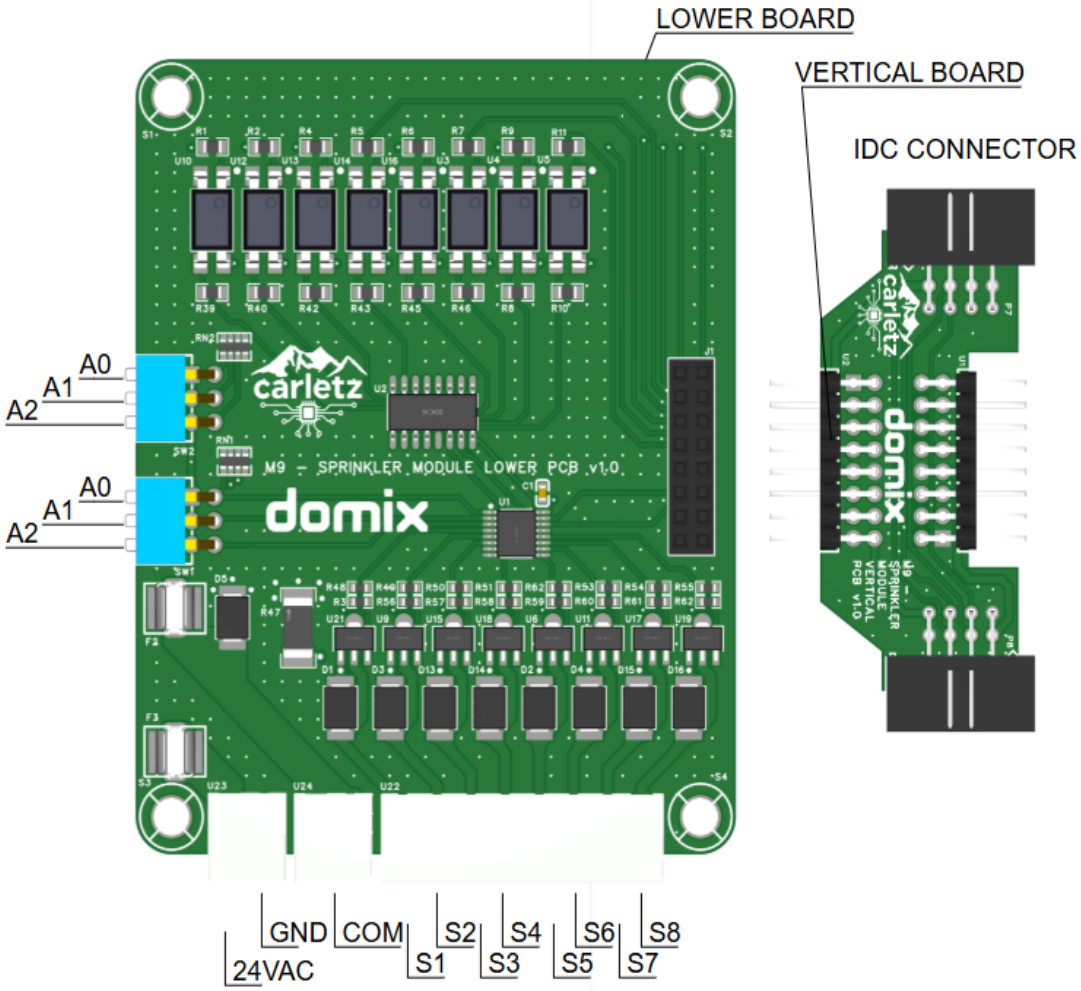

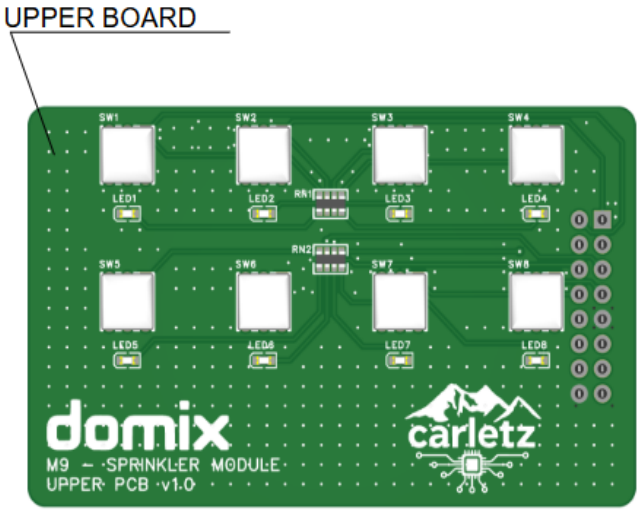

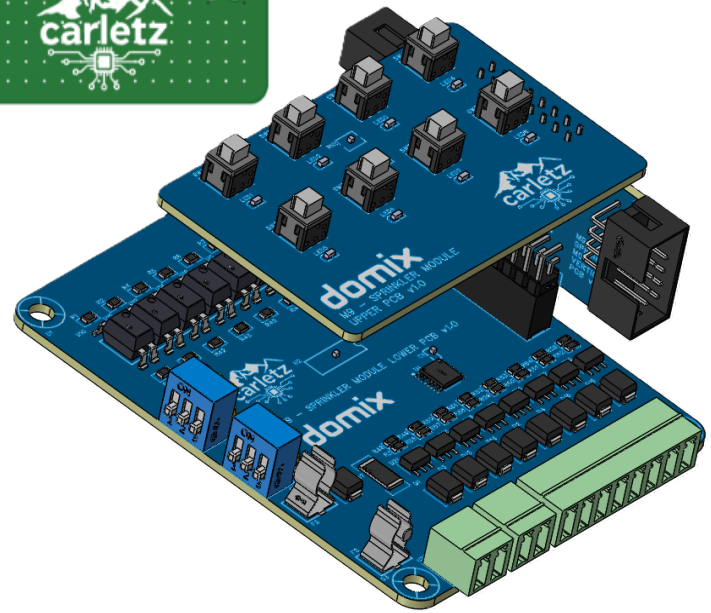

carletz	DOMIX - Domotic module for smart home & co		Create at	2026-02-06	Drawn	carletz
			Update at	2026-02-14	Reviewed	carletz
	Version	Size	Page 1 Total 3	Schematic	M9 - Sprinkler Module		
	1	A4	EasyEDA	Board	M9 - SPRINKLER	Page	Description

External 24VAC power

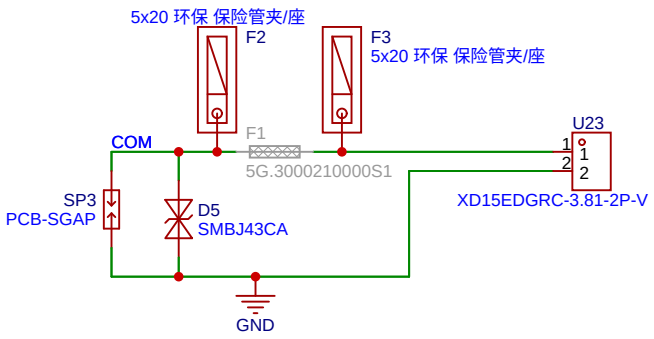

Connector & Miscellanea

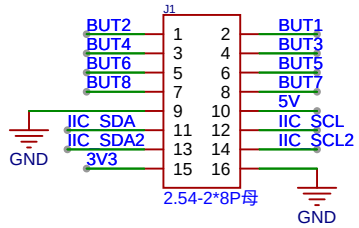

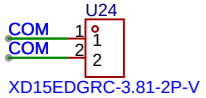

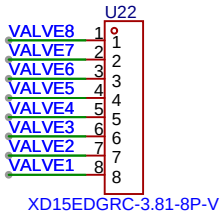

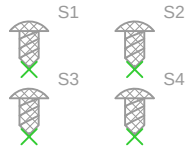

NOTE: Please add 2x C41430724 for pin connector and
1x C22365805 for valve connector to your BOM

Sprinkler valves

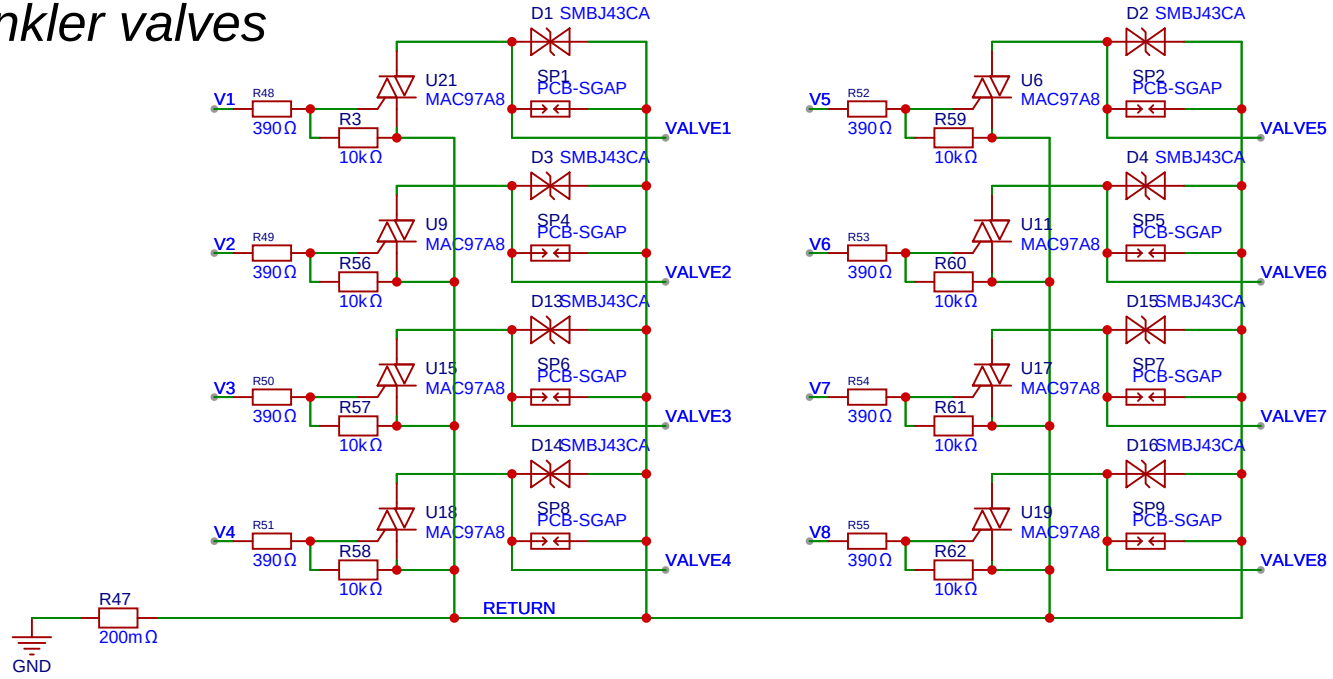

I2C

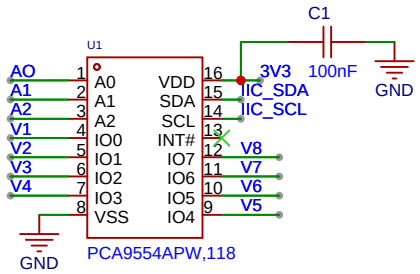

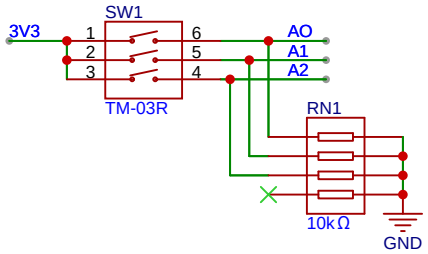

carletz	DOMIX - Domotic module for smart home & co		Create at	2026-02-06	Drawn carletz
			Update at	2026-02-09	Reviewed carletz
	Version	Size	Page 2 Total 3	Schematic	M9 - Sprinkler Module
	1	A4	EasyEDA	Board	M9 - SPRINKLER	Page Sprinkler

External input

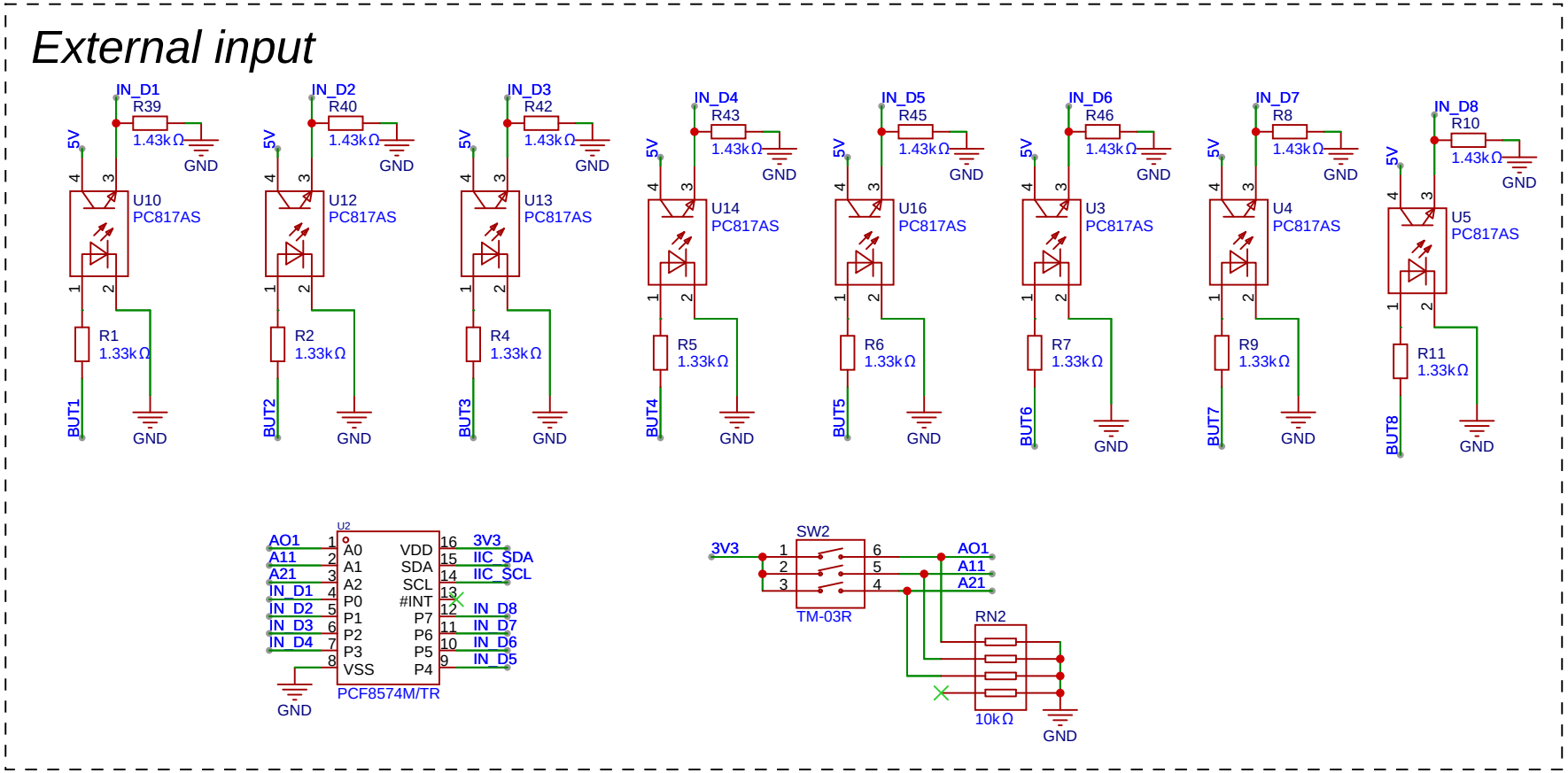

DOMIX - Domotic module for smart home & co			Create at	2026-02-06	Drawn carletz
			Update at	2026-02-09	Reviewed carletz
Version	Size	Page 3 Total 3	Schematic	M9 - Sprinkler Module	
1	A4	EasyEDA	Board	M9 - SPRINKLER	Page Input